COMPRESSOR ESSVE 20/300

SINGLE PHASE V.230/50Hz

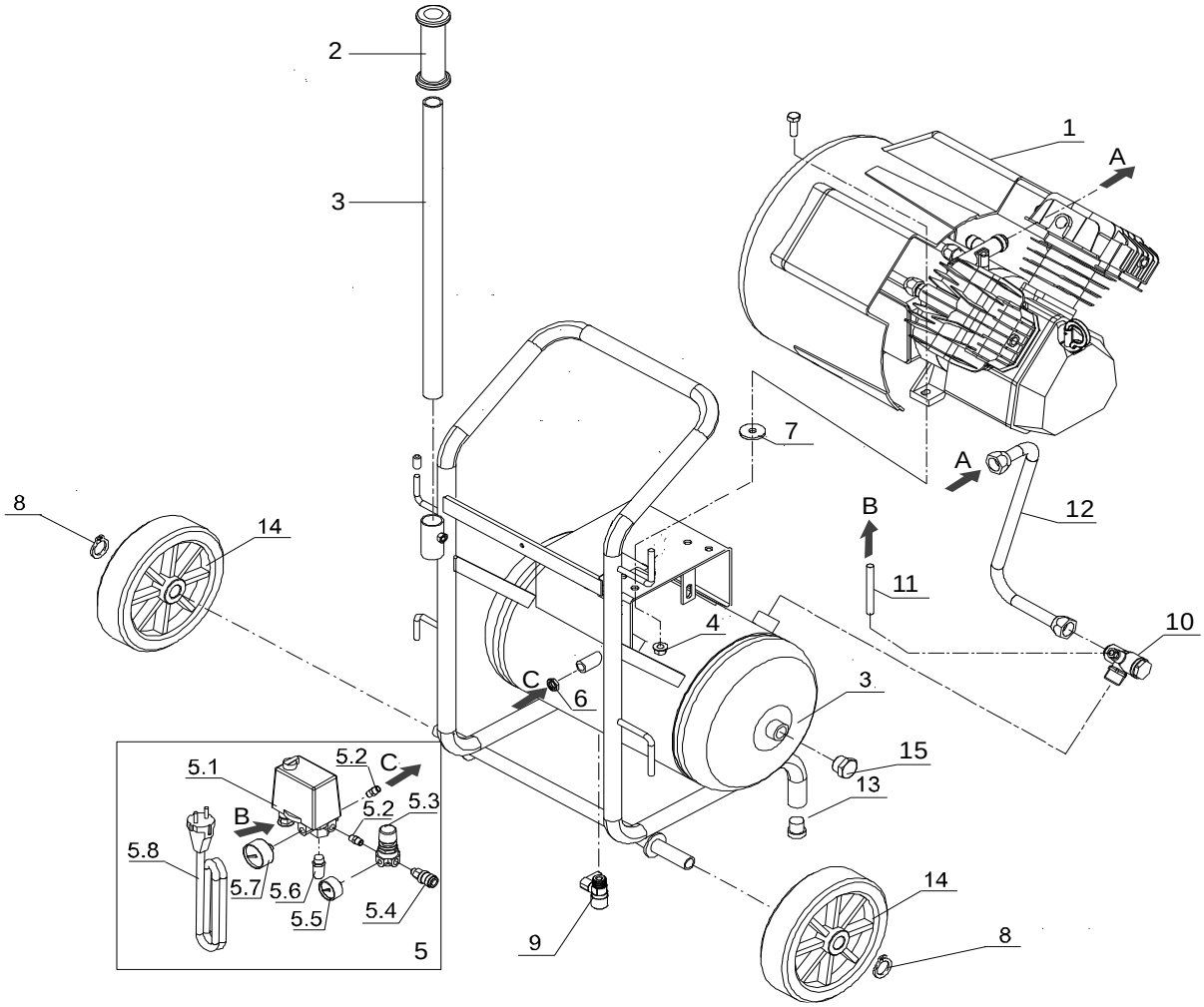

REF.	ESSVE item numb.:	QT	DESCRIPTION
1	10001460	1	pump unit
2	10001592	1	handle
3	10001605	1	metal handle
4	10001503	1	nut
5	10001463	1	pressure switch kit
5,1	10001591	1	pressure switch
5,2	10001543	1	nipple
5,3	10001554	1	pressure reducer
5,4	10001562	1	universal quick tap
5,5	10001557	1	pressure gauge
5,6	10001572	1	safety valve
5,7	10001558	1	pressure gauge
5,8	10001599	1	power cable
6	10001506	1	lock nut
7	10001603	4	rubber
8	10001508	2	ring
9	10001563	1	ball tap
10	10001568	1	check valve
11	10001577	0,7	rilsan tube
12	10001580	1	feed tube
13	10001601	2	rubbert foot
14	10001632	2	wheel
15	10001552	1	cap

VALID FROM 2021-12-16 (REV-00)

2021-12-16

COMPRESSOR ESSVE 20/300

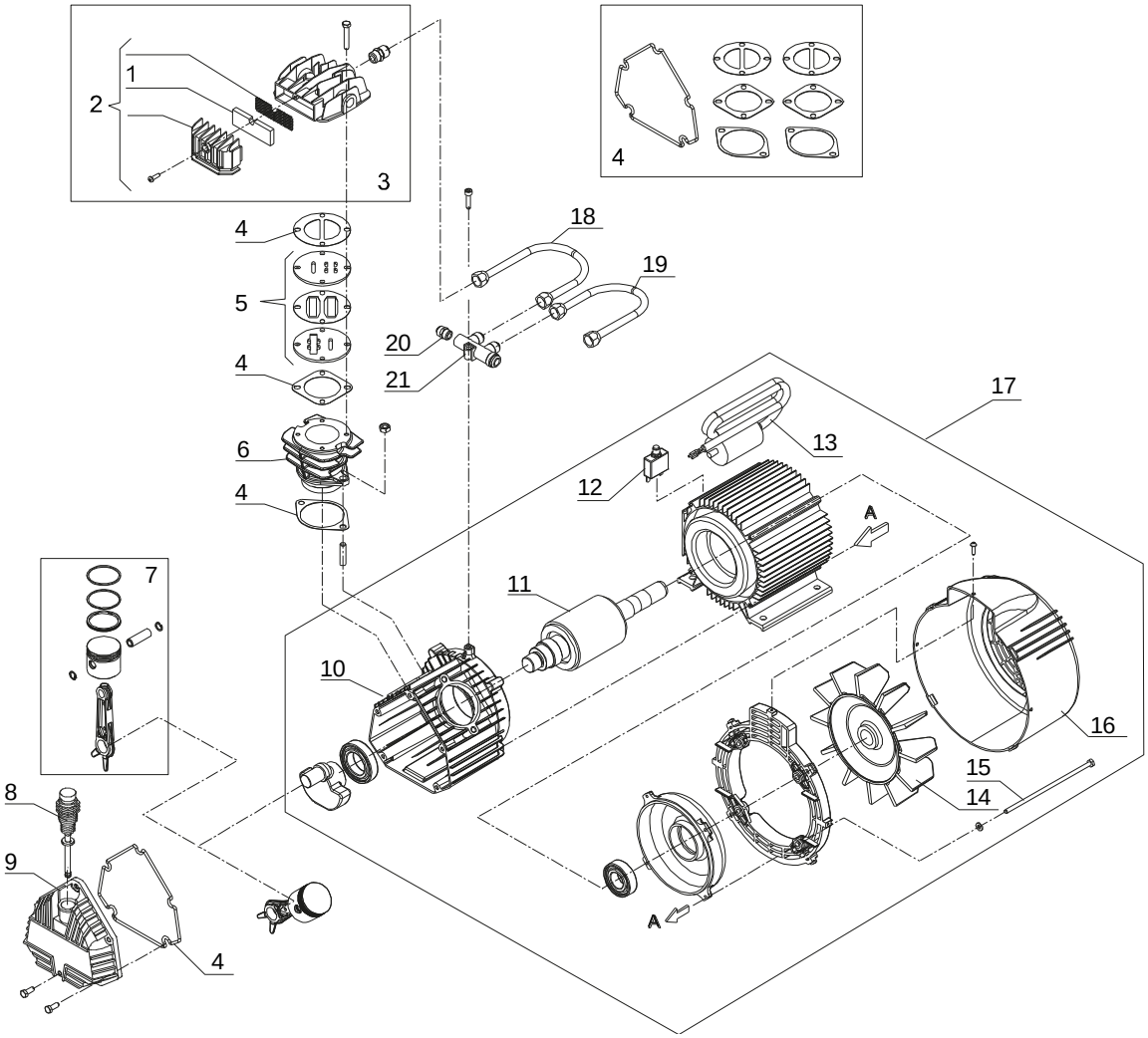

REF.	ESSVE item numb.:	QT	DESCRIPTION
1	10001575	2	filtering element
2	10001477	2	filter kit
3	10001635	2	head kit
4	10001475	1	gaskets kit
5	10001610	2	valve plate kit
6	10001612	2	cylinder
7	10001566	1	oil level rod
7	10001481	2	connecting rod, piston kit
9	10001614	1	crankcase cover
10	10001458	1	crankcase
11	10001459	1	rotor
12	10001608	1	thermic
13	10001596	1	capacitor
14	10001631	1	fan
15	10001500	4	tie
16	10001630	1	conveyor
17	10001629	1	single-phase motor kit
18	10001582	1	feed tube
19	10001583	1	feed tube
20	10001573	1	start valve
21	10001551	1	collector

VALID FROM 2021-12-16 - 2021-12-16 (REV-00)